E-Power Variable Speed Pump

SAVES UP TO 85% ON ENERGY CONSUMPTION

For large residential pools and water features

Modbus

Product Features:

1. Permanent Magnet Motor (PMM)
2. Totally Enclosed Fan Cooled (TEFC)
3. 5L Strainer Basket
4. 316 Stainless Steel Shaft
5. 316 Stainless Steel Mechanical Seal
6. 2"/2.5" Union Connection
7. IPX5 Waterproof

Emaux
water technology

SAA

Pool & Spa Equipment

Product **Features**

ENERGY SAVING

LOW NOISE LEVEL

ONE TOUCH CONTROLLER

Robust and Reliable
Latest Hydraulic Design

Compared to the Emaux EPV range, traditional single-speed pumps run continuously and inefficiently at maximum load incurring high running costs. Reduced speed provides slower water circulation rates and puts less strain on the complete installation such as filter, sanitization and plumbing. It reduces the wear-and-tear factor ending in significant savings for the pool owner.

Energy Saving

Emaux E-Power Variable Speed Pump reduces the energy use of your pool, spa, and water features. Thanks to its higher efficiency, it eliminates over-usage and reduces equipment maintenance costs.
The energy saving is achieved by programming the pump to reach the ideal flow rate schedule. As the pump speed is reduced, the water flow drops. A 50% reduction in speed cuts the flow rate by half, but at the same time reduces the power consumption by up to 85%.

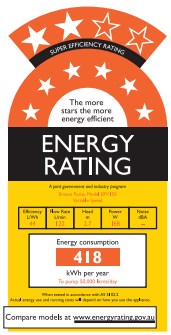

User-Friendly Controller

Emaux E-Power Variable Speed Pump maximizes the efficiency of your pool filtration system with the aid of a one-touch controller. The presettable direct speed controller enables pool owners to manage their usage with the press of a single button to schedule their water treatment system with piece of mind.

Super Quiet Operation

With the advanced hydraulic design, water moves much more efficiently and the operation is whisper quiet with the E-Power Variable Speed Pump operating at lower speeds. The Permanent Magnet Motor technology eliminates excessive motor noise. E-Power Variable Speed Pump satisfies the most discerning user.

New Connectivity and External Smart Control DOWNLOAD THE APP

SMART LIFE

GET IT ON Google Play

Download on the App Store

IoT Connection:

An IoT version can be controlled and monitored over an internet connection, enabling users to manage pool functions remotely. This connectivity allows for real-time adjustments, automated scheduling, and enhanced efficiency in maintaining optimal water quality.

EMAUX PUMP

GET IT ON Google Play

Download on the App Store

Multi-device connection:

The multi-device connection version allows multiple phones and devices to connect locally, enabling control and monitoring without requiring internet access.

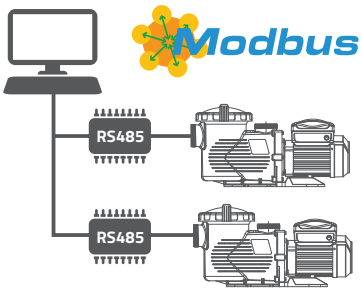

Code	Description
40201031	3C 22AWG 7.62M 4PIN RS485 Modbus Harness Cable

Physical **Structure**

IPX5 Waterproof Standard · Strainless Steel 316 Shaft
Permanent Magnet Motor (PMM) · Totally Enclosed Fan Cooled (TEFC)

Motor Advantages

Emaux E-Power Variable Speed Pump utilizes the latest Permanent Magnet Motors (PMM) technology, which produces a magnetic field between the rotor and windings. The energy saving is derived from the ability to reduce the RPM of the motor itself. The standard motor consumes electricity to induce the magnetic field into the rotor. On the other hand, PMM motor gains efficiency by the permanent magnets working to spin the rotor, achieving an efficiency rating of 90%.

1. Programmable Controller
- Operate by Variable Speed Driver
- Aluminium casting

2. Motor
- Permanent Mangnet Motor (PPM)
- Totally Enclosed Fan Cooled (TEFC)
- Aluminium Motor Casting
- 800 RPM - 3450 RPM
- Voltage: 220V-240V

7. Groove Ball Bearing
- Temperature rating: 120°C

6. Motor Shaft
- Stainless Steel 316 Construction

5. Shaft Seal
- Carbon rotating face
- SiC Stationary face
- Stainless Steel 316 spring
- EPDM Bellows

4. Impeller
- Made of glass filled polycarbonate

3. Diffuser
- Made of glass filled polycarbonate

Product **Information**

Product Dimensions (unit: mm)

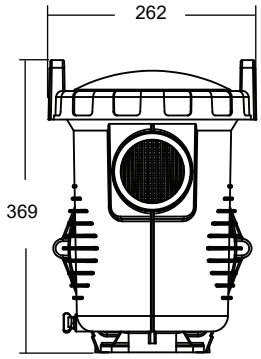

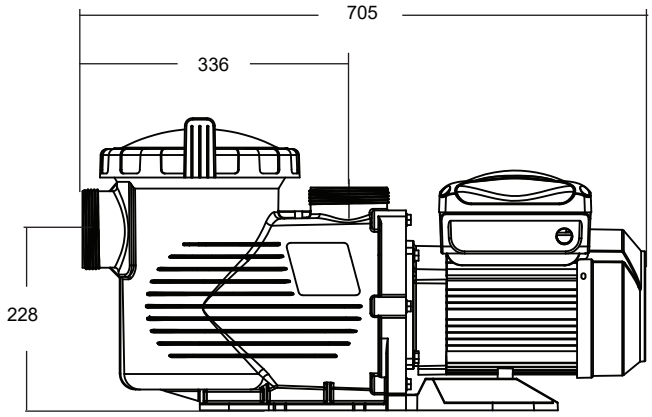

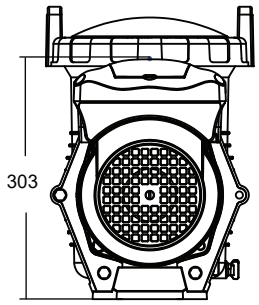

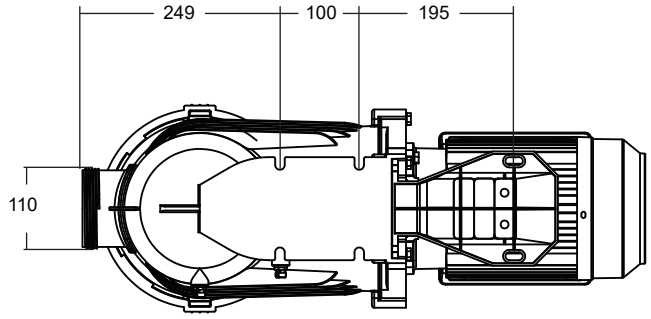

Technical Information

Code (220V-240V 50/60Hz)	Model	Connection Size(inch/mm)		Max. Input Power (kW)	Horsepower (hp)	Weight (kg)
9021605	EPV150-RS485	2”	63	1.50	1.50	23
		2.5”	75			
9021606	EPV200-RS485	2”	63	1.80	2.00	24
		2.5”	75			
9021607	EPV300-RS485	2”	63	2.20	3.00	25
		2.5”	75			
9021611	EPV150-WIFI+RS485	2”	63	1.50	1.50	23
		2.5”	75			
9021612	EPV200-WIFI+RS485	2”	63	1.80	2.00	24
		2.5”	75			
9021613	EPV300-WIFI+RS485	2”	63	2.20	3.00	25
		2.5”	75			

Performance Data

EPV150 230V-50Hz/60Hz

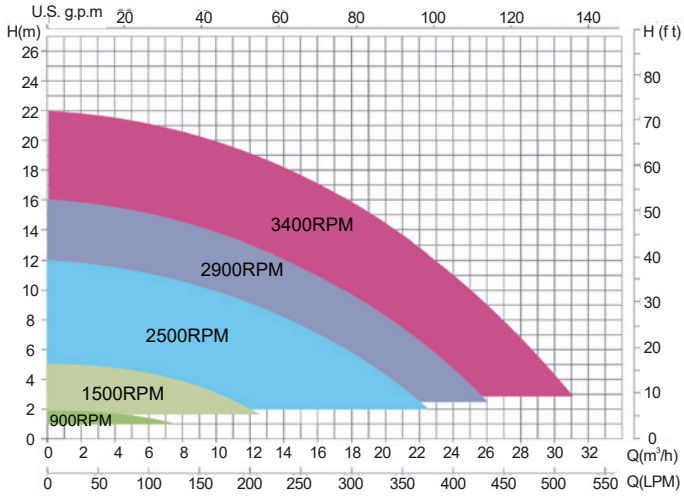

Model: EPV150

Speed (RPM)	Flow (LPM)	Efficiency (Liter/Watt)	Flow (GPM)	Efficiency (Gallon/Watt)	Power (Watt)
900	101	121	27	32	50
1500	207	95	55	25	130
2500	368	44	97	12	505
2900	417	29	110	8	850
3400	509	26	135	7	1190

EPV200 230V-50Hz/60Hz

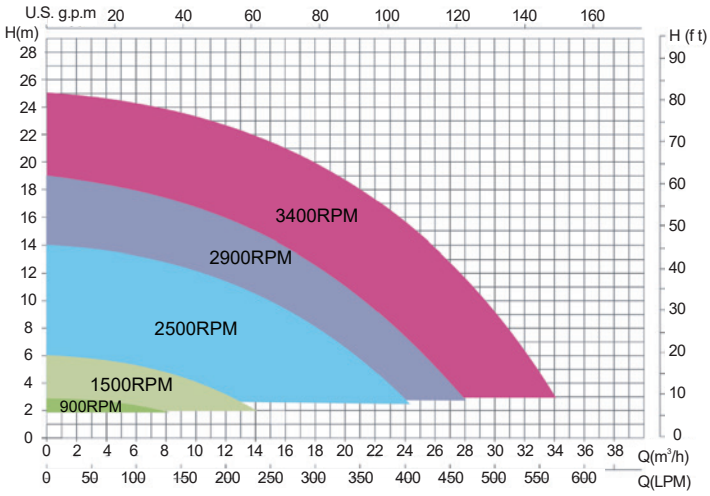
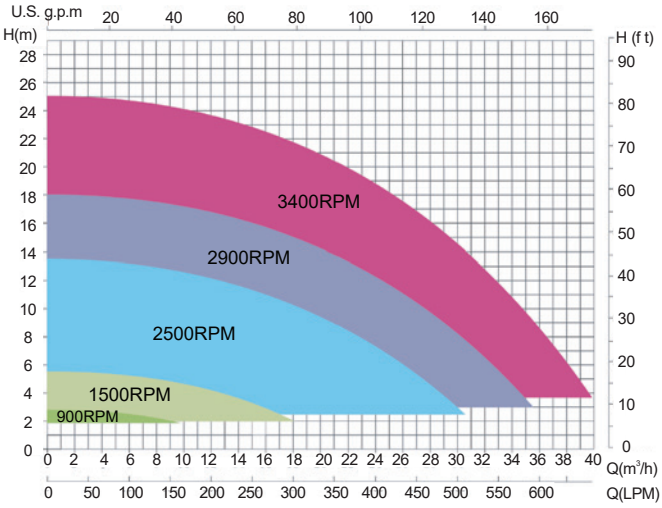
EPV300 230V-50Hz/60Hz